COURSE OVERVIEW EE0140
Motors, Variable Speed Drives & Generators
Selection, Applications, Operation, Diagnostic Testing, Maintenance & Troubleshooting

Course Title

Motors, Variable Speed Drives & Generators: Selection, Applications, Operation, Diagnostic Testing, Maintenance & Troubleshooting

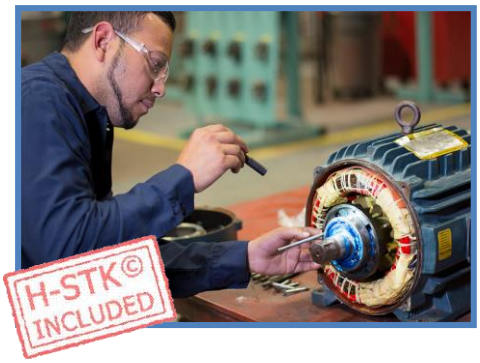

Course Date/Venue

Session 1: April 25-29, 2027/Meeting Plus 9, City Centre Rotana Doha Hotel, Doha, Qatar
Session 2: November 28-December 02, 2027/Meeting Plus 9, City Centre Rotana Doha Hotel, Doha, Qatar



Course Reference

EE0140

Course Duration/Credits

Five days/3.0 CEUs/30 PDHs

Course Description



This practical and highly-interactive course includes various practical sessions and exercises. Theory learnt will be applied using our state-of-the-art simulators.

Maximum efficiency, reliability, and longevity of the various types of motors, variable speed drives and generators are of great concern to many industries. These objectives can only be achieved by understanding the characteristics, selection criteria, common problems and repair techniques, preventive and predictive maintenance.

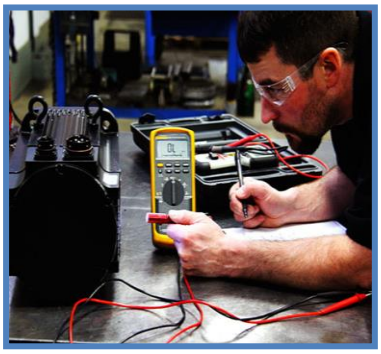

This course is a MUST for anyone who is involved in the selection, applications, or maintenance of motors, variable speed drives and generators. It provides the latest in technology.

The course covers how this equipment operate and provides guidelines and rules that must be followed for a successful operation. Their basic design, operating characteristics, specification, selection criteria, advanced fault detection techniques, critical components as well as all maintenance issues are covered in detail.



The course is designed to provide a comprehensive understanding of the various types of motors, variable-speed drives and generators. Participants will be able to specify, select, commission and maintain this equipment for their applications.

Course participants will gain enough knowledge to achieve reduced capital, operating and maintenance costs along with increase in efficiency.

Course Objectives/Outcomes & Benefits for the Participants

Upon the successful completion of this course, each participant will be able to:-

- Apply systematic techniques on selection, application, operation, diagnostic testing, maintenance and troubleshooting of motors, variable speed drives and generators
- Discuss the fundamentals and machinery principles including AC machines fundamentals and induction motors
- Identify the speed control of induction motors as well as carryout proper maintenance of motors
- Recognize power electronics, rectifiers and pulse-width modulation inverters
- Describe variable-speed drives, bearings and lubrication
- Employ vibration analysis, predictive maintenance and diagnostic testing
- Determine generators covering rotor, stator, seals, excitation, voltage regulator and power system stabilizer
- Operate, test, inspect and maintain generators in a professional manner

Exclusive Smart Training Kit - H-STK®



*Participants of this course will receive the exclusive "Haward Smart Training Kit" (**H-STK®**). The **H-STK®** consists of a comprehensive set of technical content which includes **electronic version** of the course materials conveniently saved in a **Tablet PC**.*

Who Should Attend

This course provides an overview of all significant aspects and considerations of motors, variable speed drives and generators for those who are involved in the selection, applications, operation, diagnostic testing, maintenance and troubleshooting of motors and variable speed drives and generators.

Training Methodology

Our courses employ an interactive, learner-centred methodology that integrates theoretical knowledge with practical application. The training is delivered through a suitable combination of some or all of the following methods, selected according to the course content and learning objectives:

- Instructor-led presentations and facilitated discussions
- Practical workshops and participant presentations
- Hands-on exercises and real-world case studies
- Equipment demonstrations and technical drawings
- Hardware- and software-based simulations
- Gamification & Role Play in soft-skills courses only
- Virtual Reality (VR) and Augmented Reality (AR)
- Instructional videos and other relevant training resources

This blended approach encourages active participation, strengthens practical skills and supports the effective application of acquired knowledge in the workplace.

Learning Design & Customization

This course can be customized to the exact requirements of clients. Haward Technology is so proud of our huge capabilities in tailoring our courses to the training needs of our valued clients.

Course Certificate(s)

Internationally recognized certificates will be issued to all participants of the course who completed a minimum of 80% of the total tuition hours.

Certificate Accreditations

Haward's certificates are accredited by the following international accreditation organizations:

- British Accreditation Council (BAC)

  Haward Technology is accredited by the **British Accreditation Council** for **Independent Further and Higher Education** as an **International Centre**. Haward's certificates are internationally recognized and accredited by the British Accreditation Council (BAC). BAC is the British accrediting body responsible for setting standards within independent further and higher education sector in the UK and overseas. As a BAC-accredited international centre, Haward Technology meets all of the international higher education criteria and standards set by BAC.

- The International Accreditors for Continuing Education and Training (IACET - USA)

  Haward Technology is an Authorized Training Provider by the International Accreditors for Continuing Education and Training (IACET), 2201 Cooperative Way, Suite 600, Herndon, VA 20171, USA. In obtaining this authority, Haward Technology has demonstrated that it complies with the **ANSI/IACET 2018-1 Standard** which is widely recognized as the standard of good practice internationally. As a result of our Authorized Provider membership status, Haward Technology is authorized to offer IACET CEUs for its programs that qualify under the **ANSI/IACET 2018-1 Standard**.

  Haward Technology's courses meet the professional certification and continuing education requirements for participants seeking **Continuing Education Units** (CEUs) in accordance with the rules & regulations of the International Accreditors for Continuing Education & Training (IACET). IACET is an international authority that evaluates programs according to strict, research-based criteria and guidelines. The CEU is an internationally accepted uniform unit of measurement in qualified courses of continuing education.

  Haward Technology Middle East will award **3.0 CEUs** (Continuing Education Units) or **30 PDHs** (Professional Development Hours) for participants who completed the total tuition hours of this program. One CEU is equivalent to ten Professional Development Hours (PDHs) or ten contact hours of the participation in and completion of Haward Technology programs. A permanent record of a participant's involvement and awarding of CEU will be maintained by Haward Technology. Haward Technology will provide a copy of the participant's CEU and PDH Transcript of Records upon request.

Course Instructor(s)

This course will be conducted by the following instructor(s). However, we have the right to change the course instructor(s) prior to the course date and inform participants accordingly:

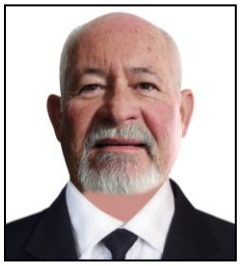

Mr. Ken Steel is a **Senior Electrical & Instrumentation Engineer** with over **30 years** of extensive experience. His expertise widely covers **Electrical Motors Testing**, **Heat Tracing** & Insulation Installation & Testing, **HV Terminations**, **High & Low Voltages** on Overhead Cranes, **HV/MV Cable Splicing**, **Cable & Over Head Power Line**, **HV/MV Switchgear, HV Cable** Design, **Medium & High Voltage** Equipment, **High Voltage Circuit Breaker** Inspection & Repair, **High Voltage Power** System, **HV Equipment** Inspection & Maintenance, **HV Switchgear** Operation & Maintenance, Resin / **Heat Shrink & Cold Shrink** Joints, **HV/LV Equipment**, **LV & HV** Electrical System, **Cable** Splicing & Termination, **High Voltage** Electrical Safety, **LV**, **MV & HV Cable** Installations & Properties, **LV Substation**, **MV & LV Cable**, **UPS Systems**, **MV & LV** Direct on Line Motor Drives, **MV & LV** VSD Motor Drives, **MV & LV** Soft Starter Motor Drives, **LV Two Speed Motor Drives**, Underground **Transformer Oil Containment Tank**, **Electrical & Instrumentation Construction** Installation, 1500KW, 1000KW, 1752KW **Diesel Power Plant Installation**, **110KV Overhead Line**, **110KV Outdoor Switchgear**, 110KV/10KV 6500KVA **Transformer**, **Transformer Substation**, 1600KVA 10KV/0.4KV & 2 Off 1000KVA **Diesel Generators**, 1600KVA 10KV/0.4KV & 1650KVA **Diesel Generator**, **110KV/35KV/10KV Substation**, 110KV/10KV **Transformers**,110KV & 2 Off 6KV **Overhead Lines**, 34.5KV,13.8KV ,4.16KV & 480V **Switchgear**, 4.16KV & 480V MCC, **Transformers & Motor Drives** Substations, **Diesel Driven Generators**, **Overhead Cranes**, **Overhead Cranes & HVAC Units**, **AC & DC Drives**, **Data Logger**, **Electrical, Instrumentation & Mechanical** Installation Maintenance, Slab Mills, Pre Heat Ovens, Hydraulic Shears, Stamping Machine, Gearboxes, Rollers, Pumps, Valves, Electro Magnets & Pump House Operation, Boilers Construction And Commissioning, Valve Calibration & Testing, Level Gauges, Pressure & Flow Transmitters Installation & Calibration, Pressure & Leak Testing of Boilers, Leak Testing, SMP, Elect, I&C, F&G, HVAC & Utility Services, Nitrogen Leak Test Operations, Steam Blowing Activities, SMP, Elect, I&C, F&G, HVAC & Utility Services, PTW Issue (PA/AC), Installation & Mechanical Piping and Hydro Testing & Leak Testing of Lines Installation.

During Mr. Steel's career life, he has gained his practical experience through several significant positions and dedication as the **3GP PBF & Boilers SC Commission Support**, **SC Site Execution Superintendent**, **E&I Construction Superintendent**, **High Voltage Construction Supervisor**, **Control & Power Construction Supervisor**, **Electrical & Instrumentation Supervisor**, **Electrical Technician**, **Construction Support Electrical Engineer**, **E&I Engineer**, **Electrical/Instrumentation Site Supervisor**, **Q.A/Q.C Inspector**, **Electrical/ Instrumentation Technician**, **Maintenance Fitter Instrumentation Technician**, **Millwright**, **Apprentice Millwright** and **Senior Instructor/Lecturer** for Tengiz Chevron Oil Kazakhstan, Al Jubail Saudi Arabia, Escravos Delta state Nigeria, Lurgi S.A, SuD Chemie Sasol Catalysts, J C Groenewalds Construction (LTA), Tycon (Goodyear S.A.), Dragline Construction and Iscor Vanderbijlpark.

Mr. Steel has a **Diploma** in **Electronics Mechanic**. Further, he is a **Certified Instructor/Trainer** and delivered numerous trainings, courses, workshops, seminars and conferences internationally.

Course Fee

US$ 6,000 per Delegate. This rate includes H-STK® (Haward Smart Training Kit), buffet lunch, coffee/tea on arrival, morning & afternoon of each day.

Accommodation

Accommodation is not included in the course fees. However, any accommodation required can be arranged at the time of booking.

Course Program

The following program is planned for this course. However, the course instructor(s) may modify this program before or during the course for technical reasons with no prior notice to participants. Nevertheless, the course objectives will always be met:

Day 1

0730 – 0800	*Registration & Coffee*
0800 – 0815	*Welcome & Introduction*
0815 – 0830	***PRE-TEST***
0830 – 0930	***Review of Fundamentals/Introduction to Machinery Principles*** *Capacitors ● Dielectrics ● Magnetic Field ● Ampere's Law ● Faraday's Law ● Inductance ● Alternating Currents ● Magnetic Circuits ● Permeability ● Flux ● Ferromagnetic Cores ● Reluctance ● Saturation ● Hysteresis*
0930 – 0945	*Break*
0945 – 1230	***AC Machines Fundamentals*** *Rotor & Stator Design ● Windings ● Poles ● Three-Phase Circuits ● Induced Torque ● Winding Insulation ● AC Machine Power Flows & Losses*
1230 – 1245	*Break*
1245 – 1330	***Induction Motors*** *Stator & Rotor Construction ● Synchronous Speed ● Induced Torque ● Rotor Slip ● Equivalent Circuit of an Induction Motor ● Induction Motor Construction ● Squirrel-Cage Rotors ● Wound Rotors ● Synchronous Speed ● Operating Speed ● Slip ● Equivalent Circuit ● Inrush Current ● Losses & Power-Flow Diagram ● Torque-Speed Characteristics ● Variation of Torque-Speed Characteristics ● Induction Generator ● NEMA Classes of Motors ● Control of Motor Characteristics ● Starting Circuits*
1330 - 1420	***Speed Control of Induction Motors*** *Speed Control by Changing the Line Frequency ● Voltage ● Rotor Resistance ● Solid-State Motor Drives ● Motor Protection ● Induction Generator ● Motor Ratings & Specifications*
1420 – 1430	***Recap*** *Using this Course Overview, the Instructor(s) will Brief Participants about the Topics that were Discussed Today and Advise Them of the Topics to be Discussed Tomorrow*
1430	*Lunch & End of Day One*

Day 2

0730 – 0930	***Maintenance of Motors*** *Characteristics of Motors ● Enclosures & Cooling Methods ● Application Data ● Design Characteristics ● Insulation of Motors ● Failures in Three-Phase Stator Windings ● Predictive Maintenance ● Motor Troubleshooting ● Diagnostic Testing for Motors ● Insulation Resistance & Polarization Index*
0930 – 0945	*Break*

0945 – 1100	***Power Electronics, Rectifiers & Pulse-Width Modulation Inverters*** *Introduction to Power Electronics ● Power Electronics Components ● The Diode ●The Two-Wire Thyristor or PNPN Diode ● The Three-Wire Thyristor or SCR ● The Gate Turn Off Thyristor ● The DIAC ● the TRIAC ● The Power Transistor ● The Insulated Gate Bipolar Transistor (IGBT) ● Power & Speed Comparison of Power Electronic Components ● Basic Rectifiers Circuits ● The Half-Wave Rectifier ● The Full-Wave Rectifier ● The Three-Phase Half Wave Rectifier*
1100 – 1230	***Power Electronics, Rectifiers & Pulse-Width Modulation Inverters (cont'd)*** *The Three-Phase Full-Wave Rectifier ● Filtering Rectifier Output ● Pulse Circuits ● Relaxation Oscillator Using a PNPN Diode ● Pulse Synchronization ● Voltage Variation by AC Phase Control ● AC Phase Control for a DC Load Driven from an AC Source ● AC Phase Angle Control for an AC Load ● The Effect of Inductive Loads on Phase Angle Control ● Inverters ● Rectifiers ● External Commutation Inverters ● Self-Commutated Inverters ● Pulse-Width Modulated (PWM) Inverters*
1230 – 1245	*Break*
1245 – 1330	***Variable-Speed Drives*** *Basic Principles of AC Variable-Speed Drives (VSD's) ● Constant Torque Region ● Constant Power (Extended Speed) Region ● Inverters ● Parts of an Inverter ● Pulse Width Modulated (PWM) Inverters ● Insulated Gate Bipolar Transistors (IGBT's) ● 2-Level Pulse Width Modulated Inverter (PWM-2) ● Input Power Converter (Rectifier) ● DC Link Energy ● Output IGBT Inverter ● Input Sources for Regeneration or Dynamic Slowdown ● Dynamic Breaking ● Regeneration ● PWM-2 Considerations ● Transients ● Harmonics Power Factor and Failures ● Common Failure Modes ● Fault Current Limit ● Device Explosion Rating ● Device Application ● Thyristor Failures & Testing ● Recognizing Failed Silicon Controlled Rectifier (SCR)/Diod ● Testing of SCR's/Diodes ● Comments about Failure Rates ● AC Drive Applications Issues*
1330 - 1420	***Variable-Speed Drives (cont'd)*** *Diode Source Current Unbalance ● AC Power Factor● AC Input Power Changes with AC Input Voltage ● IGBT Switching Transients● Insulation Voltage Stress ● Motor Winding Voltage Distribution ● Radiated Electromagnetic Interferences (EMI) ● Cable Terminating (Matching) Impedance ● Inverter Output Filter ● Extra Insulation ● Cabling Details for AC Drives ● Cable Details ● Motor ● Cable & Power System Grounding ● Motor Bearing Currents ● Motor Shaft Grounding Brush ● Reduction of Stator to Rotor Capacitance Value ● Motor Cable Wiring Practices ● Summary of Application Rules for AC Drives ● Selection Criteria of Variable Speed Drives ● Variable Process Speed ● Compressors & Pumps ● Motor Starting ●Regeneration ● Dynamometer ● Paper Machine Winder ● Dynamic Breaking ● Maintenance ● Common Failure Modes● Motor Application Guidelines*
1420 – 1430	***Recap*** *Using this Course Overview, the Instructor(s) will Brief Participants about the Topics that were Discussed Today and Advise Them of the Topics to be Discussed Tomorrow*
1430	*Lunch & End of Day Two*

Day 3

0730 – 0930	***Bearings*** *Types of Bearings ● Ball & Roller Bearings ● Materials & Finish ● Sizes of Bearings ● Types of Rolling Bearings ● Thrust Bearings*
0930 – 0945	*Break*

0945 – 1100	***Lubrication*** *Viscosity of Lubricants ● Variation of Viscosity with Temperature & Pressure ● Viscosity Index ● Non-Newtonian Fluids ● Greases ● VI Improved Oils ● Oils at Low Temperatures ●Variation of Lubricant Viscosity with Use ● Oxidation Reactions ● Physical Reactions ● Housing and Lubrication ● Lubrication of Antifriction Bearings ● Used Oil Analysis (Proper Lube Oil Sampling Technique, Test Description and Significance, Visual and Sensory Inspections, Chemical and Physical Tests, Water Content, Viscosity, Emission Spectrographic Analysis, Infrared Analysis, Total Base Number (TBN), Total Acid Number (TAN), Particle Count, Summary)*
1100 – 1230	***Vibration Analysis, Predictive Maintenance & Diagnostic Testing*** *Application of Sine Waves to Vibration ● Resonance ● Use of Filtering ● Vibration Instrumentation ● Frequency Domain ● Machinery Example ● Vibration Causes ● Forcing Frequency Causes ● Unbalance ● Misalignment ● Mechanical Looseness ● Bearing Defects ● Gear Defects ● Oil Whirl ● Blade or Vane Problems ● Electric Motor Defects ● Uneven Loading ● Drive-Shaft Torsion ● Resonant Frequency ● Vibration Severity ● A Case History (Motor Shaft Misalignment) ● Vibration in Predictive Maintenance (Diagnostics (Identifying the Characteristic Vibration Patterns of Common Faults; Looseness of Anti-Friction Bearings, Journal Bearings & Gears))*
1230 – 1245	*Break*
1245 – 1420	***Generators*** *Generator Construction ● Excitation ● Rectifiers ● Equivalent Circuit of a Synchronous Generator ● Power & Torque in Synchronous Generators ● Synchronous Generator Operating Alone ● Effect of Load Changes on a Synchronous Generator Operating Alone ● Parallel Operation of AC Generators ● Conditions Required for Paralleling ● The General Procedure for Paralleling Generators ● Frequency-Power & Voltage-Reactive Power Characteristics of a Synchronous Generator ● Operation of Generators in Parallel with Large Power Systems ● Generator Ratings ● Voltage Speed & Frequency Ratings ● Apparent Power & Power-Factor Ratings ● Synchronous Generator Capability Curves ● Short-Time Operation & Service Factor*
1420 – 1430	***Recap*** *Using this Course Overview, the Instructor(s) will Brief Participants about the Topics that were Discussed Today and Advise Them of the Topics to be Discussed Tomorrow*
1430	*Lunch & End of Day Three*

Day 4

0730 – 0930	***Generator Rotor*** *Rotor Construction ● Rotor Components (Windings, Fans, End Rings, Wedges & Dampers, Sliprings, Brushgear & Shaft Grounding) ● Rotor Threading & Alignment ● Vibration ● Bearing ● Seals*
0930 – 0945	*Break*
0945 – 1100	***Generator Stator*** *Stator Core ● Core Frame ● Stator Winding ● End Winding Support ● Electrical Connections & Terminals ● Stator Winding Cooling Components ● Hydrogen Cooling Components ● Stator Casing ● Cooling Systems ● Hydrogen Cooling System*
1100 – 1230	***Generator Seals*** *Shaft Seals & Seal Oil System ● Thrust Type Seal ● Journal Type Seal ● Seal Oil System ● Stator Winding Water Cooling System ● Other Cooling Systems*

1230 – 1245	Break
1245 – 1420	***Generator Excitation*** *Ac Excitation Systems ● Exciter Transient Performance ● The Pilot Exciter ● Salient-Pole Permanent Magnet Generator ● The Main Exciter ● Exciter Performance Testing ● Pilot Exciter Protection ● Brushless Excitation Systems ● The Rotating Armature Main Exciter*
1420 – 1430	***Recap*** *Using this Course Overview, the Instructor(s) will Brief Participants about the Topics that were Discussed Today and Advise Them of the Topics to be Discussed Tomorrow*
1430	*Lunch & End of Day Four*

Day 5

0730 – 0930	***Generator Voltage Regulator*** *Automatic Voltage Regulator (AVR) System Description ● The Regulator ● Auto Follow-Up Circuit ● Manual Follow-Up ● AVR Protection ● The Digital AVR ● Excitation Control ● Rotor Current Limiter ● Overfluxing Limit*
0930 – 0945	Break
0945 – 1100	***Generator Power System Stabiliser*** *Power Oscillations ● Power System Stabiliser (PSS) ● Characteristic Of Generator Exciter Power System (GEP) ● Excitation System Analysis*
1100 - 1230	***Generator Operation*** *Running-up to Speed ● Open Circuit Conditions & Synchronization ● The Application of a Load ● Capability Chart ● Neutral Grounding ● Rotor Torque*
1230 - 1245	Break
1245 - 1345	***Generators Testing, Inspection & Maintenance*** *Stator & Rotor Tests (Electrical & Mechanical) ● Generator Inspection ● Maintenance of Generator & Auxiliaries ● Major Repairs ● Generator Surveillance*
1345 - 1400	***Course Conclusion*** *Using this Course Overview, the Instructor(S) will Brief Participants About the Course Topics that Were Covered During the Course*
1400 – 1415	***POST-TEST***
1415 – 1430	*Presentation of Course Certificates*
1430	*Lunch & End of Course*

Simulators (Hands-on Practical Sessions)

Practical sessions will be organized during the course for delegates to practice the theory learnt. Delegates will be provided with an opportunity to carryout various exercises using our state-of-the-art "Troubleshooting Electrical Circuits V4.1 Simulator" and "Lab Volt Testing Device".

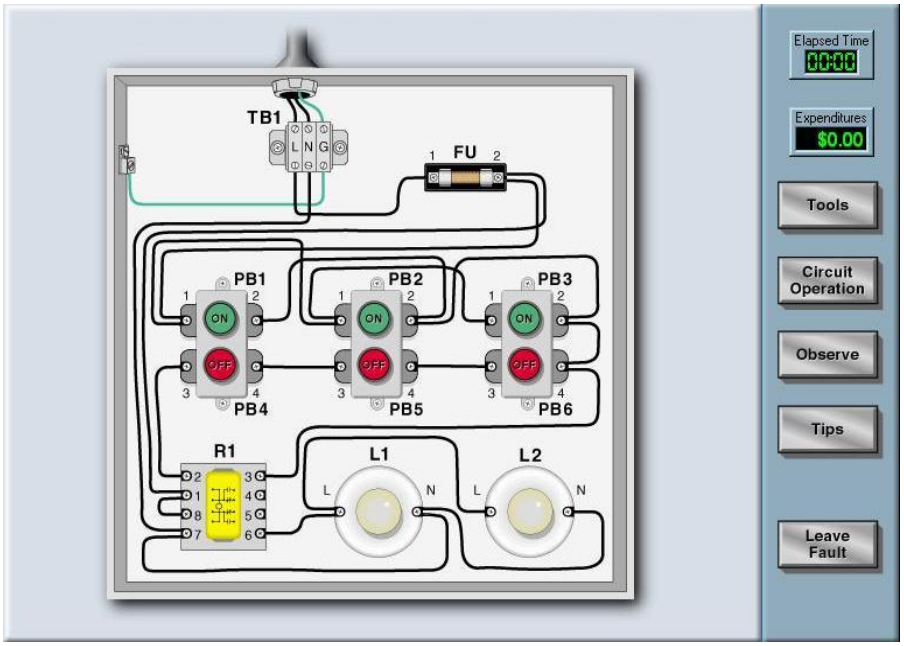

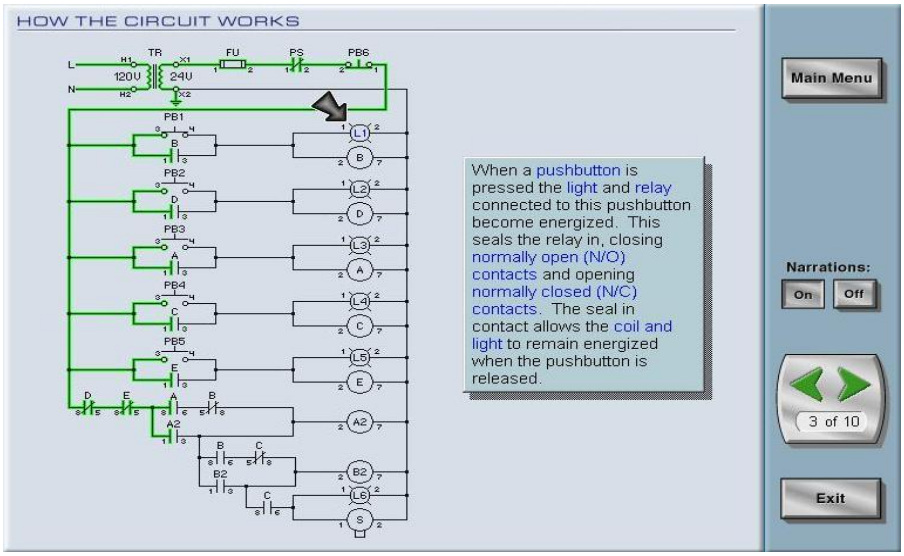

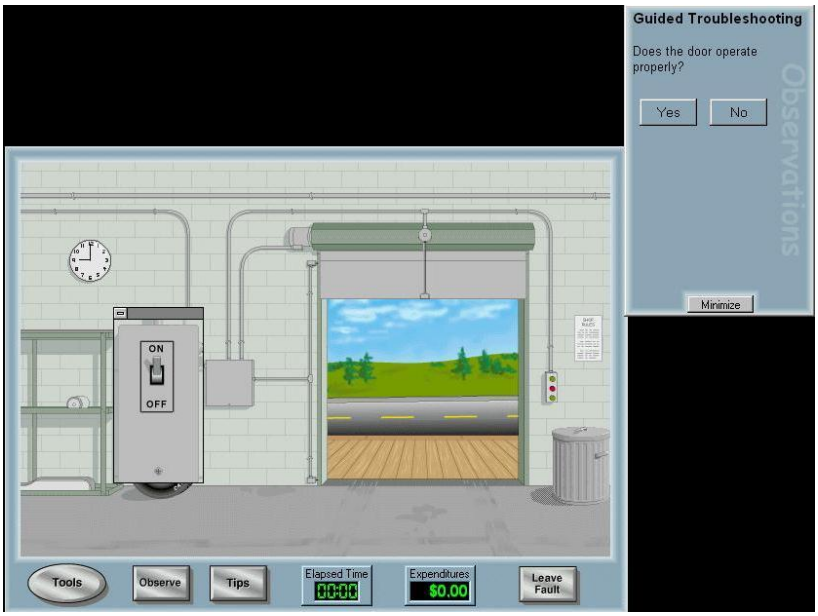

Troubleshooting Electrical Circuits V4.1 Simulator



Lab Volt Testing Device

Course Coordinator
Jaryl Castillo, Tel: +974 6652 9196, Email: jaryl@haward.org