COURSE OVERVIEW EE0135
Electric Motors & Variable Speed Drives
Selection, Applications, Operation, Diagnostic Testing, Protection, Control, Troubleshooting & Maintenance

Course Title
Electric Motors & Variable Speed Drives: *Selection, Applications, Operation, Diagnostic Testing, Protection, Control, Troubleshooting & Maintenance*



Course Date/Venue
Session 1: January 31-February 04, 2027/Meeting Plus 9, City Centre Rotana Doha Hotel, Doha, Qatar
Session 2: March 28-April 01, 2027/Meeting Plus 9, City Centre Rotana Doha Hotel, Doha, Qatar



Course Reference
EE0135

Course Duration/Credits
Five days/3.0 CEUs/30 PDHs

Course Description






This practical and highly-interactive course includes various practical sessions and exercises. Theory learnt will be applied using our state-of-the-art simulators.

It is estimated that electrical drives and other rotating equipment consume about 50% of the total electrical energy consumed in the world today. The cost of maintaining electrical motors can be a significant amount in the budget item of manufacturing, oil, gas, petrochemical and power industries. This course gives you a thorough understanding of electrical motor's working, maintenance and failure modes and gives you the tools to maintain and troubleshoot electrical motors and variable speed drives.

Maximum efficiency, reliability, and longevity of the various types of motors and variable-speed drives are of great concern to many industries. These objectives can only be achieved by understanding the characteristics, selection criteria, common problems and repair techniques, preventive and predictive maintenance. This course is a MUST for anyone who is involved in the selection, applications, or maintenance of motors, and variable-speed drives. It provides the latest in technology.

The course covers how this equipment operate and provides guidelines and rules that must be followed for a successful operation. Their basic design, operating characteristics, specification, selection criteria, advanced fault detection techniques, critical components as well as all maintenance issues are covered in detail.

You will gain a fundamental understanding of the installation, operation and troubleshooting of electric motors. Typical applications of electric motors in oil, gas, petrochemical, power, manufacturing, materials handling, process control are covered in detail. You will learn the basic steps in specifying, installing, wiring and commissioning motors. The concluding section of the course gives you the fundamental tools in troubleshooting motors confidently and effectively.

This course is designed to provide participants with a comprehensive understanding of the various types variable-speed drives. Participants will be able to specify select, commission and maintain these equipment for their applications. The excellent knowledge and skills that participants gained in this course will help their companies in achieving reduced capital, operating and maintenance costs along with increase in efficiency.

Course Objectives/Outcomes & Benefits for the Participants

Upon the successful completion of this course, each participant will be able to:-

- Apply proper techniques on selection, application, operation, diagnostic testing, protection, control, troubleshooting and maintenance of electric motors and variable speed drives
- Gain an in-depth knowledge on electrical machines and discuss their devices, symbols and circuits
- Enumerate the electric motor types and demonstrate how to operate and perform their functions
- Discuss the construction, operation and performance of 3-Phase AC induction motors
- Emphasize the importance of motor speed control and become familiar with power electronic converters
- Protect and select AC converters, motors & control system and conduct installation & commissioning of AC variable speed drives
- Identify the sources of electromagnetic compatibility (EMC) and analyse & test the different types of motor failure
- Carryout predictive maintenance techniques such as the vibration analysis
- Conduct machinery faults diagnosis & correction using vibration analysis and corrective measures
- Apply bearing failure analysis and discuss the importance of lubrication & oil analysis program

Exclusive Smart Training Kit - H-STK® (



*Participants of this course will receive the exclusive "Haward Smart Training Kit" (**H-STK®**). The **H-STK®** consists of a comprehensive set of technical content which includes **electronic version** of the course materials conveniently saved in a **Tablet PC**.*

Who Should Attend

This course provides an overview of all significant aspects and considerations of electric motors and variable speed drives for engineers and other technical personnel who are in charge of selection, application, operation, diagnostic testing, protection, control, troubleshooting or maintenance of motors and variable speed drives.

Training Methodology

Our courses employ an interactive, learner-centred methodology that integrates theoretical knowledge with practical application. The training is delivered through a suitable combination of some or all of the following methods, selected according to the course content and learning objectives:

- Instructor-led presentations and facilitated discussions
- Practical workshops and participant presentations
- Hands-on exercises and real-world case studies
- Equipment demonstrations and technical drawings
- Hardware- and software-based simulations
- Gamification & Role Play in soft-skills courses only
- Virtual Reality (VR) and Augmented Reality (AR)
- Instructional videos and other relevant training resources

This blended approach encourages active participation, strengthens practical skills and supports the effective application of acquired knowledge in the workplace.

Learning Design & Customization

This course can be customized to the exact requirements of clients. Haward Technology is so proud of our huge capabilities in tailoring our courses to the training needs of our valued clients.

Accommodation

Accommodation is not included in the course fees. However, any accommodation required can be arranged at the time of booking.

Course Fee

US$ 6,000 per Delegate This rate includes H-STK® (Haward Smart Training Kit), buffet lunch, coffee/tea on arrival, morning & afternoon of each day.

Course Certificate(s)

Internationally recognized certificates will be issued to all participants of the course who completed a minimum of 80% of the total tuition hours.

Certificate Accreditations

Haward's certificates are accredited by the following international accreditation organizations:

- British Accreditation Council (BAC)

  Haward Technology is accredited by the **British Accreditation Council** for **Independent Further and Higher Education** as an **International Centre**. Haward's certificates are internationally recognized and accredited by the British Accreditation Council (BAC). BAC is the British accrediting body responsible for setting standards within independent further and higher education sector in the UK and overseas. As a BAC-accredited international centre, Haward Technology meets all of the international higher education criteria and standards set by BAC.

- The International Accreditors for Continuing Education and Training (IACET - USA)

  Haward Technology is an Authorized Training Provider by the International Accreditors for Continuing Education and Training (IACET), 2201 Cooperative Way, Suite 600, Herndon, VA 20171, USA. In obtaining this authority, Haward Technology has demonstrated that it complies with the **ANSI/IACET 2018-1 Standard** which is widely recognized as the standard of good practice internationally. As a result of our Authorized Provider membership status, Haward Technology is authorized to offer IACET CEUs for its programs that qualify under the **ANSI/IACET 2018-1 Standard**.

  Haward Technology's courses meet the professional certification and continuing education requirements for participants seeking **Continuing Education Units** (CEUs) in accordance with the rules & regulations of the International Accreditors for Continuing Education & Training (IACET). IACET is an international authority that evaluates programs according to strict, research-based criteria and guidelines. The CEU is an internationally accepted uniform unit of measurement in qualified courses of continuing education.

  Haward Technology Middle East will award **3.0 CEUs** (Continuing Education Units) or **30 PDHs** (Professional Development Hours) for participants who completed the total tuition hours of this program. One CEU is equivalent to ten Professional Development Hours (PDHs) or ten contact hours of the participation in and completion of Haward Technology programs. A permanent record of a participant's involvement and awarding of CEU will be maintained by Haward Technology. Haward Technology will provide a copy of the participant's CEU and PDH Transcript of Records upon request.

Course Instructor(s)

This course will be conducted by the following instructor(s). However, we have the right to change the course instructor(s) prior to the course date and inform participants accordingly:



Mr. Pan Marave, PE, MSc, BEng, is a **Senior Electrical & Instrumentation Engineer** with over **30 years** of extensive experience in **Oil**, **Gas**, **Petrochemical**, **Refinery** & **Power** industries. His expertise includes Safety Instrumented Systems (**SIS**), Safety Integrity Level (**SIL**), Emergency Shutdown (**ESD**); **DCS**, **SCADA** & **PLC**; **Measurement** (**Flow**, **Temperature**, **Pressure**); **Process Analyzers** & **Analytical Instrumentation**; **Process Control**, **Instrumentation** & **Safeguarding**; **Process Controller**, **Control Loop & Valve Tuning**; Industrial **Distribution Systems**; Industrial **Control & Control Systems**, Power Systems **Protection & Relaying**; **Earthing**, **Bonding**, **Grounding**, **Lightning & Surge Protection**; Electric Power **Substation** & **Systems**; Electrical Engineering Principles; **Motor Control Circuit**; **Electrical Fault Analysis**; Electrical Networks & Distribution **Cables**; **Circuit Breakers**, **Switchgears**, **Transformers**, **Hazardous Areas Classification** and **Detailed Engineering Drawings**, **Codes** & **Standards**. Furthermore, he is also well-versed in Microprocessors Structure, Lead Auditor (**ISO 9000:2000**), **ISO 9002**, Quality Assurance, and Projects & Contracts Management.

Presently, Mr. Marave is the **Technical Advisor** of **Chamber of Industry & Commerce** in Greece. Prior to this, he gained his thorough practical experience through several positions as the **Technical Instructor**, **Engineering Manager**, **Electronics & Instruments Head**, **Electrical**, **Electronics & Instruments Maintenance Superintendent**, **Assistant General Technical Manager** and **Engineering Supervisor** of various international companies such as the **Alumil** Mylonas, **Athens Papermill**, **Astropol** and the **Science Technical Education**.

Mr. Marave is a **Registered Professional Engineer** and has **Master's** and **Bachelor's** degrees in **Electrical Engineering** from the **Polytechnic Institute of New York** and **Pratt Institute of New York** (**USA**) respectively. Further, he is a **Certified Instructor/Trainer**, a **Certified Internal Verifier/Assessor/Trainer** by the **Institute of Leadership & Management** (**ILM**) and an active member of the **Technical Chamber** and the Institute of Electrical and Electronics Engineer (**IEEE**) in Greece. He has presented and delivered **numerous international** courses, conferences, trainings and workshops worldwide.

Course Program

The following program is planned for this course. However, the course instructor(s) may modify this program before or during the course for technical reasons with no prior notice to participants. Nevertheless, the course objectives will always be met:

Day 1

0730 – 0800	*Registration & Coffee*
0800 – 0815	*Welcome & Introduction*
0815 – 0830	***PRE-TEST***
0830 – 0930	***Basic Principles of Electrical Machines*** *Introduction to Electrical Machines • AC Power Systems • Meters Used in Troubleshooting*
0930 - 0945	*Break*
0945 – 1130	***Electrical Devices, Symbols & Circuits*** *Devices & Symbols • Electrical Circuits • Reading and Understanding Electrical Drawings • Reading and Understanding Ladder Logic • Wires & Terminal Numbering*

1130 – 1230	***Electric Motors Types, Operations and Performance*** *Fundamentals of Motor Technology • Basic Principles of Rotating Electrical Machines • Fundamental Principles of Speed Control • Efficiency, Torque, Inertia, Horsepower / Power Factor*
1230 – 1245	*Break*
1245 – 1420	***Electric Motors Types, Operations & Performance (cont'd)*** *Torque -Speed Curves • Induction / Wound Rotor /Synchronous Motor Types • Basic Construction of a Motor • Principles of Operation & Performance*
1420 - 1430	***Recap*** *Using this Course Overview, the Instructor(s) will Brief Participants about the Topics that were Discussed Today and Advise Them of the Topics to be Discussed Tomorrow*
1430	*Lunch & End of Day One*

Day 2

0730 – 0930	***3-Phase AC Induction Motors*** *Basic Construction • Principles of Operation • The Equivalent Circuit • Electrical & Mechanical Performance • Motor Acceleration • AC Induction Generator Performance • Efficiency of Electric Motors*
0930 - 0945	*Break*
0945 – 1130	***3-Phase AC Induction Motors (cont'd)*** *Rating of AC Induction Motors • Electric Motor Duty Cycles • Cooling & Ventilation of Electric Motors (IC) • Degree of Protection of Motor Enclosures (IP) • Construction & Mounting of AC Induction Motors • Anti-Condensation Heaters • Methods of Starting AC Induction Motors*
1130 – 1230	***Motor Speed Control*** *The Need for Variable Speed Drives • Fundamental Principles • Torque-Speed Curves for Variable Speed Drives • Types of Variable Speed Drives • Mechanical Variable Speed Drive Methods • Hydraulic Variable Speed Drive Methods • Electromagnetic or 'Eddy Current' Coupling • Electrical Variable Speed Drive Methods*
1230 – 1245	*Break*
1245 – 1420	***Power Electronic Converters*** *Power Diodes • Power Thyristors • Commutation • Power Electronic Rectifiers (AC/DC Converters) • Gate Commutated Inverters (DC/AC Converters) • Gate Controlled Power Electronic Devices • Other Power Converter Circuit Components*
1420 - 1430	***Recap*** *Using this Course Overview, the Instructor(s) will Brief Participants about the Topics that were Discussed Today and Advise Them of the Topics to be Discussed Tomorrow*
1430	*Lunch & End of Day Two*

Day 3

0730 – 0930	***Protection of AC Converters & Motors*** *AC Frequency Converter Protection Circuits • Operator Information & Fault Diagnostics • Electric Motor Protection • Thermal Overload Protection - Current Sensors • Thermal Overload Protection - Direct Temperature Sensing*

0930 – 0945	*Break*
0945 – 1130	***Control Systems for AC Variable Speed Drives*** *The Overall Control System ● Power Supply to the Control System ● The DC Bus Charging Control System ● The PWM Rectifier for AC Converters ● Variable Speed Drive Control Loops ● Vector Control for AC Drives ● Current Feedback in AC Variable Speed Drives ● Speed Feedback from the Motor*
1130 – 1230	***Selection of AC Converters*** *The Basic Selection Procedure ● The Loadability of Converter Fed Squirrel Cage Motors ● Operation in the Constant Power Region ● The Nature of the Machine Load ● The Requirements for Starting ● The Requirements for Stopping ● Control of Speed, Torque and Accuracy ● Selecting the Correct Size of Motor and Converter*
1230 – 1245	*Break*
1245 – 1420	***Installation & Commissioning of AC Variable Speed Drives*** *General Installation & Environmental Requirements ● Power Supply Connections & Earthing Requirements ● Start/Stop Control of AC Drives ● Installing AC Converters Into Metal Enclosures ● Control Wiring for Variable Speed Drives ● Commissioning Variable Speed Drives*
1420 – 1430	***Recap*** *Using this Course Overview, the Instructor(s) will Brief Participants about the Topics that were Discussed Today and Advise Them of the Topics to be Discussed Tomorrow*
1430	*Lunch & End of Day Three*

Day 4

0730 – 0930	***Electromagnetic Compatibility (EMC)*** *The Sources of Electromagnetic Interference ● Harmonics Generated on the Supply Side of AC Converters ● Power Factor & Displacement Factor ● Voltages & Current on the Motor Side of PWM Inverters*
0930 - 0945	*Break*
0945 – 1130	***Motor Failure Analysis & Testing*** *Types of Motor Failure ● Common Causes of Motor Failure ● Modern Developments ● Insulation Life & Resistance ● Polarization Index ● DC Hipot ● DC Ramp Test*
1130 – 1230	***Motor Failure Analysis & Testing (cont'd)*** *AC Hipot ● Capacitance Test ● Dissipation Factor ● Partial Discharge ● Surge Test ● Mechanical Testing ● Online Testing*
1230 – 1245	*Break*
1245 – 1420	***Predictive Maintenance Techniques: Basics*** *Maintenance Philosophies ● Evolution of Maintenance Philosophies ● Plant Machinery Classification & Recommendations ● Principles of Predictive Maintenance ● Predictive Maintenance Techniques ● Vibration Analysis - A key Predictive Maintenance Technique*
1420 - 1430	***Recap*** *Using this Course Overview, the Instructor(s) will Brief Participants about the Topics that were Discussed Today and Advise Them of the Topics to be Discussed Tomorrow*
1430	*Lunch & End of Day Four*

Day 5

0730 – 0930	***Predictive Maintenance Techniques: Vibration Basics*** *Spring -Mass System: Mass, Stiffness, Damping ● System Response ● What is Vibration? ● The Nature of Vibration ● Harmonics ● Limits & Standards of Vibration (ISO 2372, API, AGMA, IRD)*
0930 - 0945	*Break*
0945 – 1130	***Machinery Faults Diagnosis & Correction Using Vibration Analysis & Corrective Measures*** *Unbalance ● Eccentric Rotor ● Bent Shaft ● Misalignment ● Mechanical Looseness ● Resonance ● Rotor Rubs ● Journal Bearings ● Rolling Element Bearings ● Gearing Defects ● Belt Defects ● Electrical Problems ● Flow Related Vibrations ● Rotor Crack*
1130 – 1230	***Bearing Failure Analysis*** *The Bearing ● Failure Analysis ● Bearing Failures ● Grease & Greasing ● The Belt Drive ● Balance ● Storage Issues ● Services Factor Loading*
1230 - 1245	*Break*
1245 – 1345	***Lubrication & Oil Analysis Program*** *Oil Fundamentals ● Condition-Based Maintenance & Oil Analysis ● Setting Up an Oil Analysis Program ● Oil Analysis - Sampling Methods ● Oil Analysis - Lubricant Properties ● Oil Analysis - Contaminants in Lubricants ● Particle Analysis Techniques ● Alarm Limits for Various Machines (source - National Tribology Services)*
1345 – 1400	*Summary, Open Forum & Closure*
1400 – 1415	***POST-TEST***
1415 – 1430	*Presentation of Course Certificates*
1430	*Lunch & End of Course*

Simulators (Hands-on Practical Sessions)

Practical sessions will be organized during the course for delegates to practice the theory learnt. Delegates will be provided with an opportunity to carryout various exercises using our state-of-the-art Simutech Troubleshooting Electrical Circuits V4.1" and "Lab Volt Testing Device".

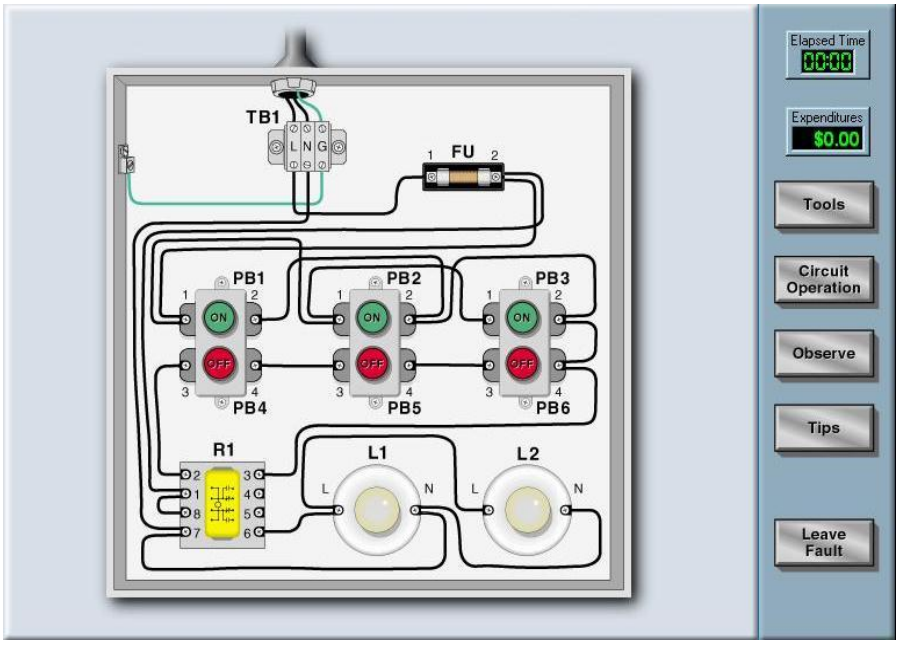

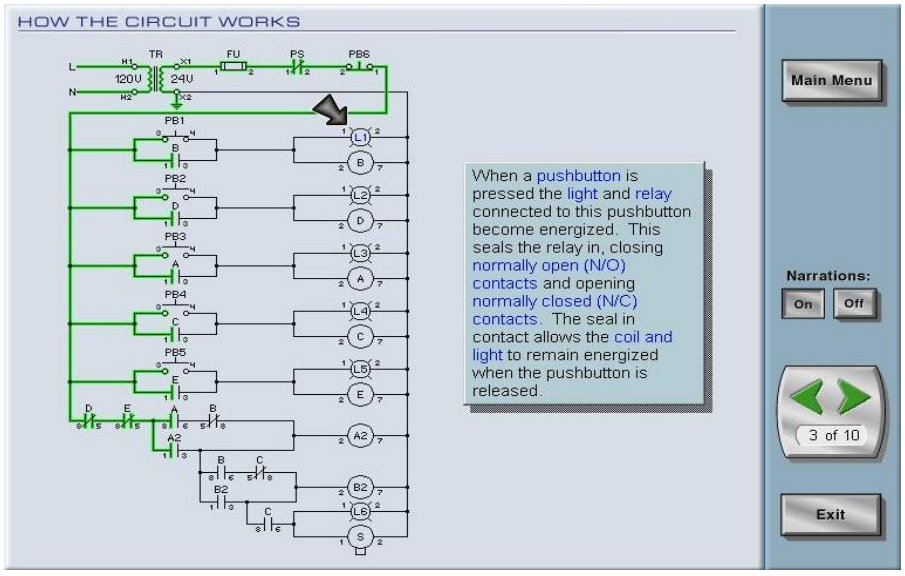



Simutech Troubleshooting Electrical Circuits V4.1



Lab Volt Testing Device

Course Coordinator
Jaryl Castillo, Tel: +974 6652 9196, Email: jaryl@haward.org